SHiFT® MODULUS

Care and Maintenance Manual

M80

Bolted Metal Pumps

Performance Curve

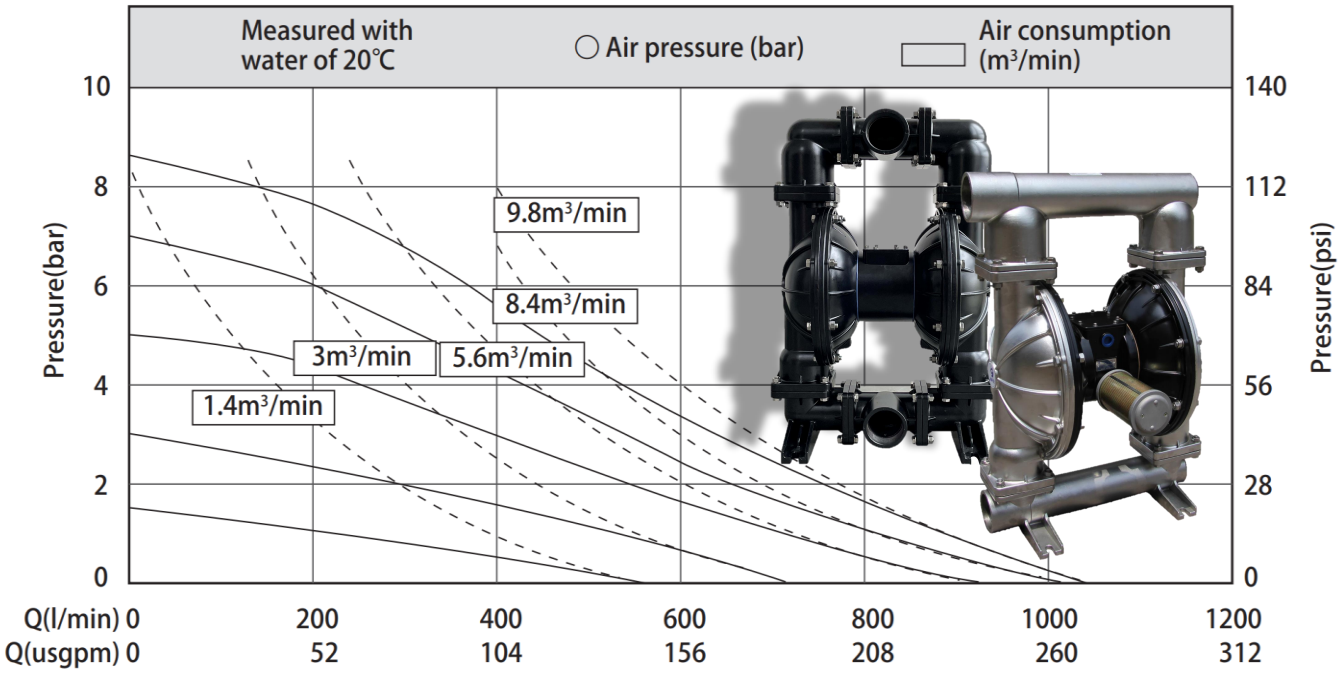

Technical Parameters

Parameter	Unit	Value
Suction Lift - dry	mwc	5
Suction lift - wet	mwc	8
Solids size	mm	9.5
Air inlet	inch	$^{3}/_{4}$
Max air inlet pressure	bar	8.4

Material of Construction

Pump Part	Material
Pump body	AL, SS, CI
Diaphragm	Santoprene (ST), Teflon (TF), Hytrel
Seat	Santoprene (ST), Teflon (TF), Hytrel
Centre block	PP, AL

Weight

Pump type	Weight
Aluminium	50kg
Stainless	105kg
Cast-iron	105kg

Dimensional Drawings: Aluminium/Cast Iron

Aluminum Pump

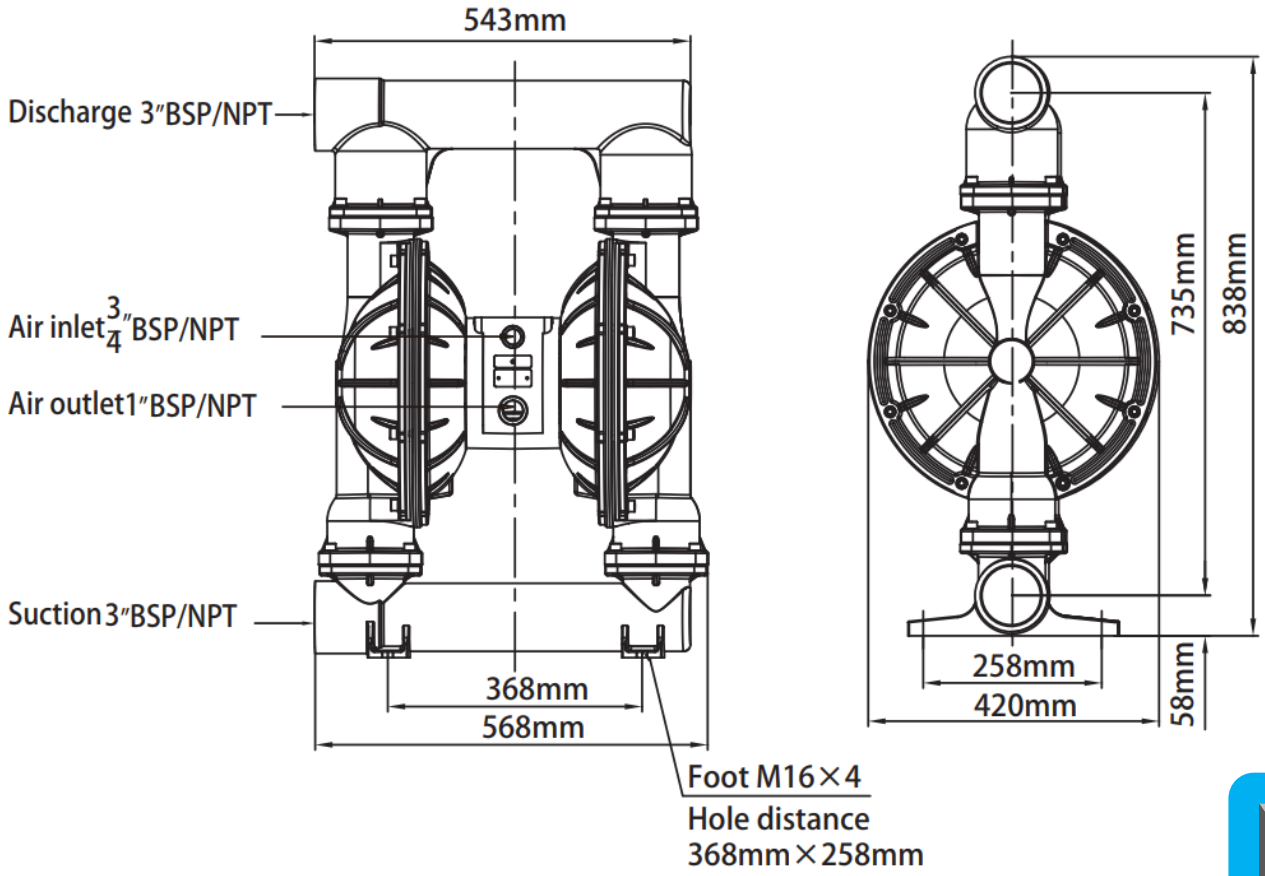

Cast iron Pump

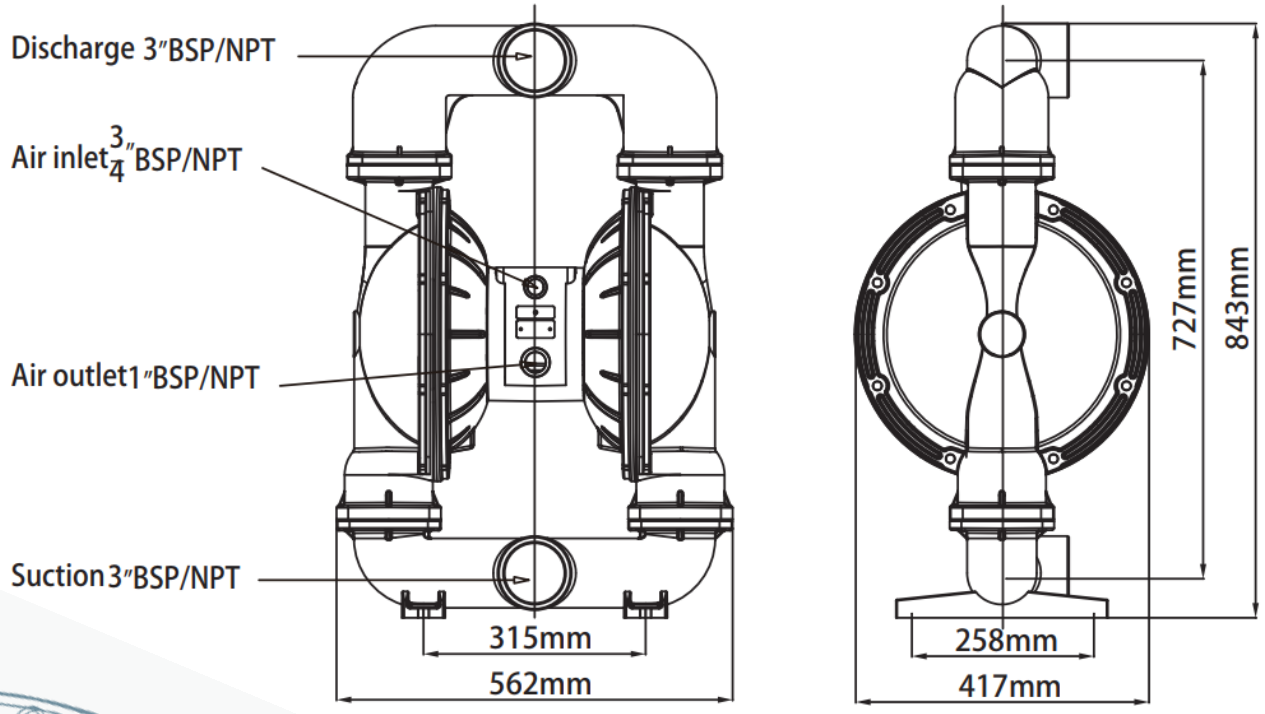

Dimensional Drawings: Stainless

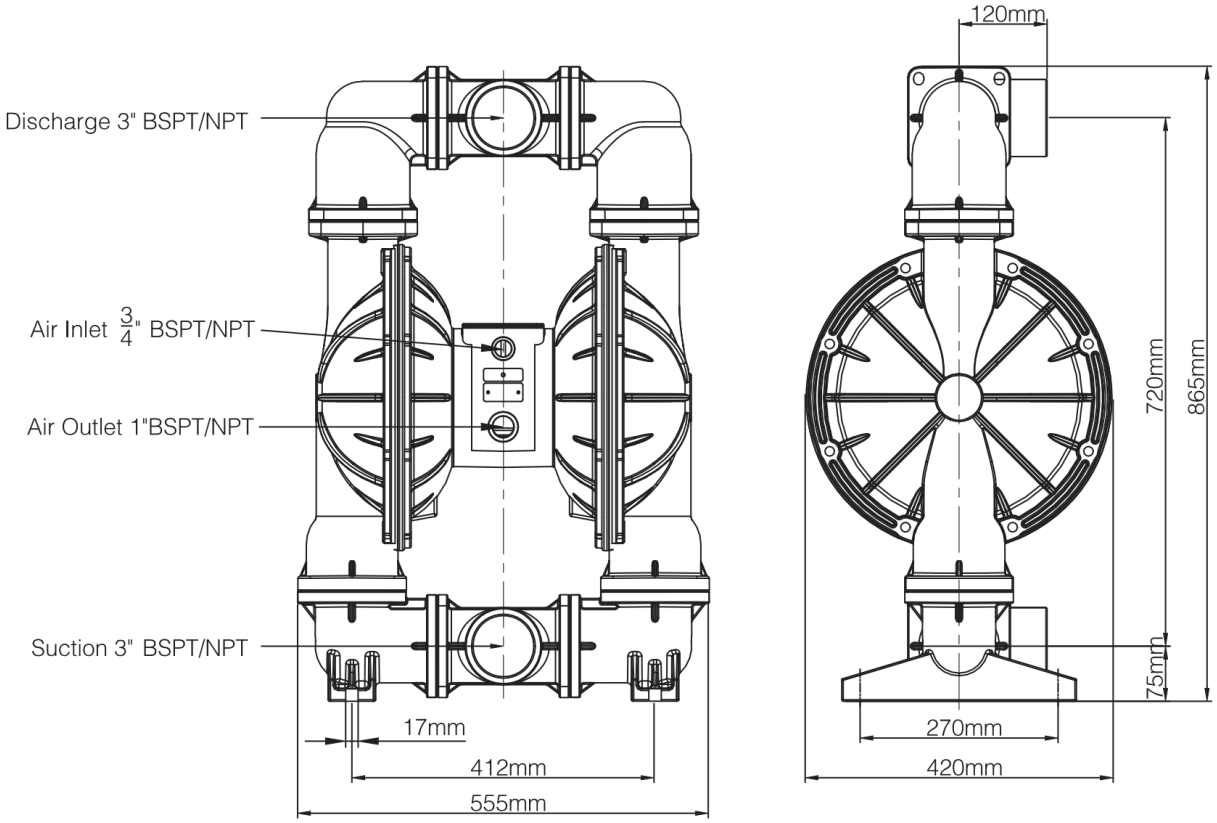

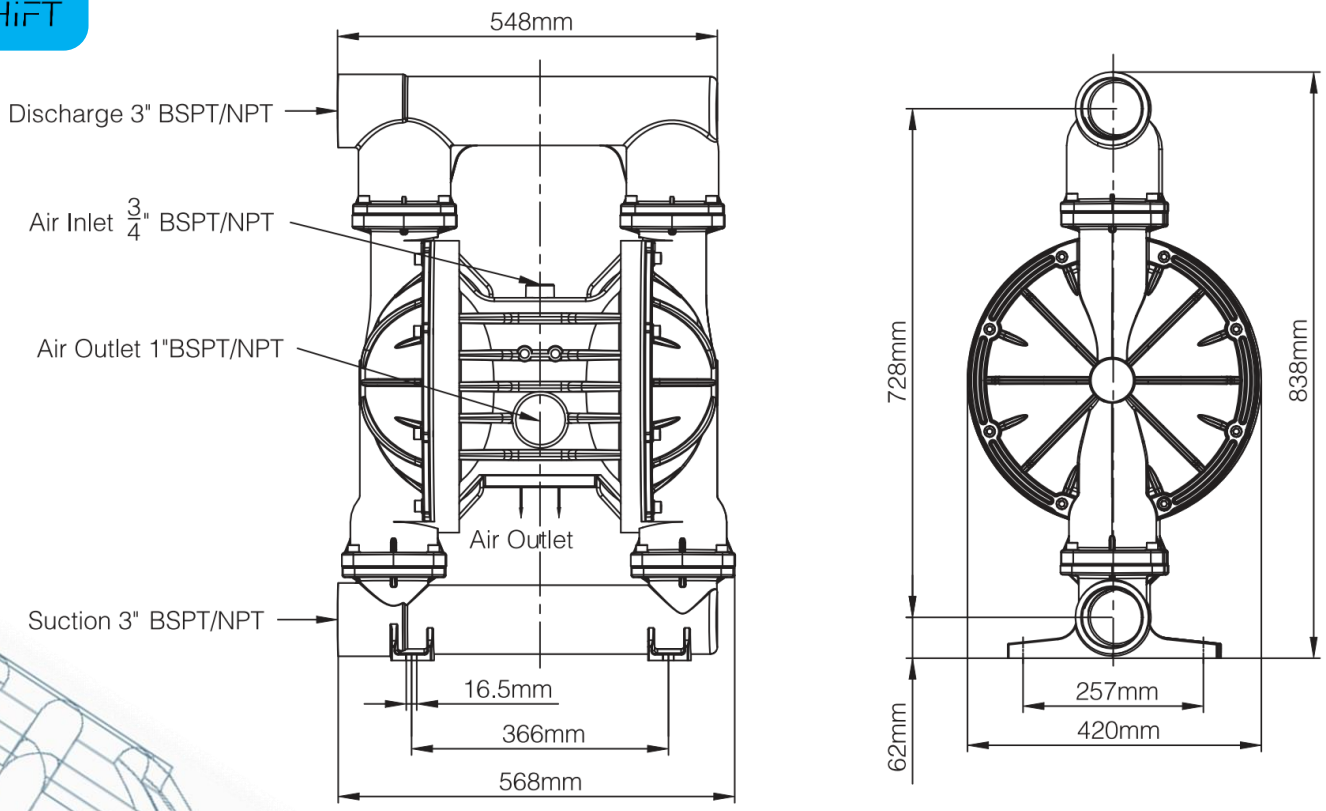

Part Numbers: Poly centre

Part code	Name
80MA1-KV	Air valve housing
80MA3-PM	Piston
80MA4-VT	Piston V-ring
80MA5-VT	Plug O-ring
80MA6-KV	Plug
80MA7-PM	Pilot valve
80MA8-SS	Valve plate
80MA9-ST	Air valve gasket
MA10-80-PP	Centre block

Part code	Name
MA11-PM	Reversing valve
MA12-VT	Shaft O-ring
80MA13-SS	Shaft
80MA14-PM	Locking plate
MA15-SS	Snap ring
80MA16-VT	Rod V-ring
80MA17-PP	Muffler plate
M80-AL	Muffler

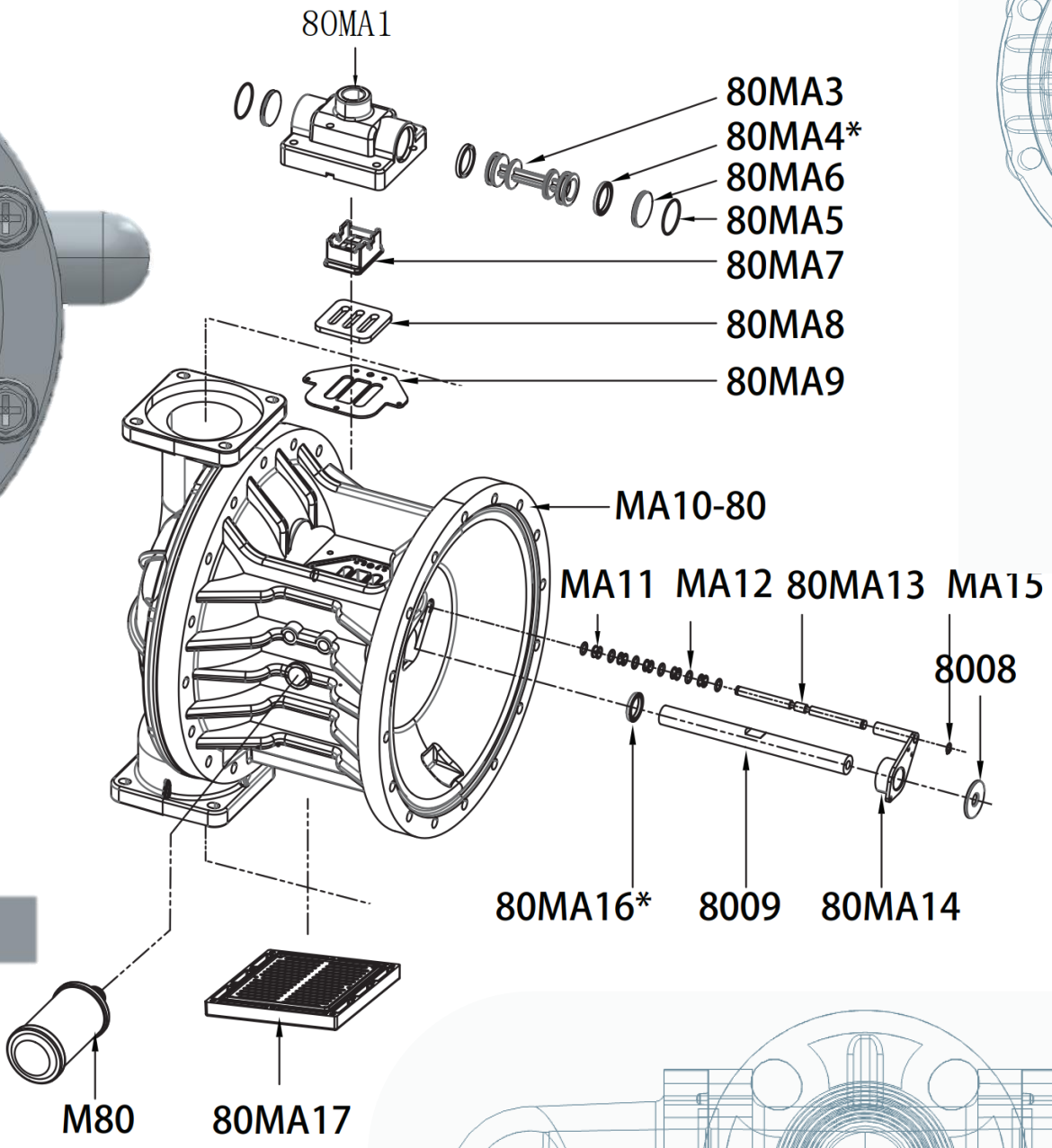

Part Numbers: Poly centre

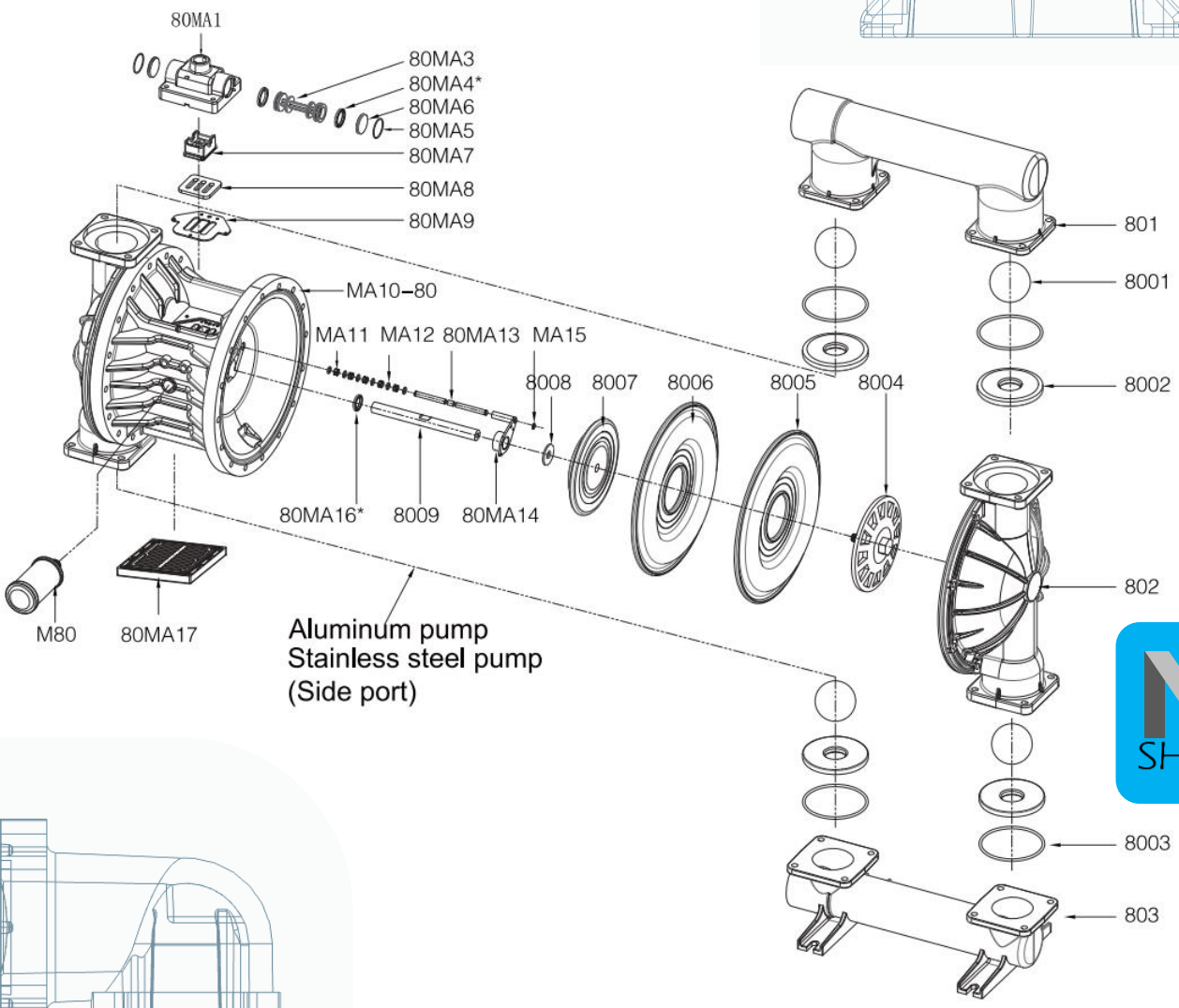

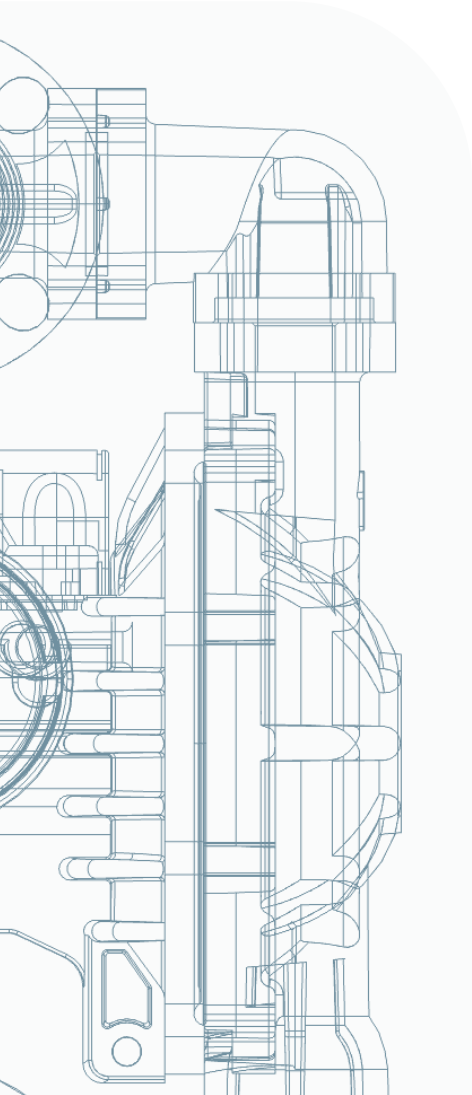

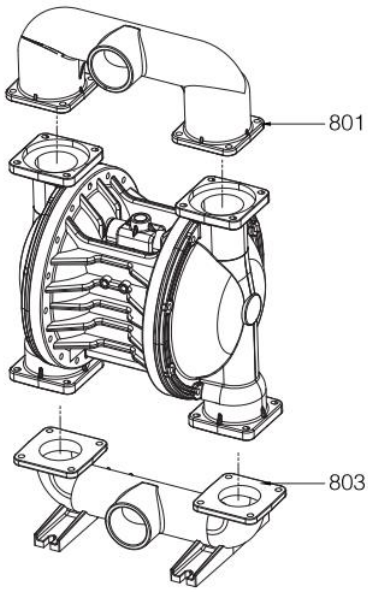

Cast iron pump

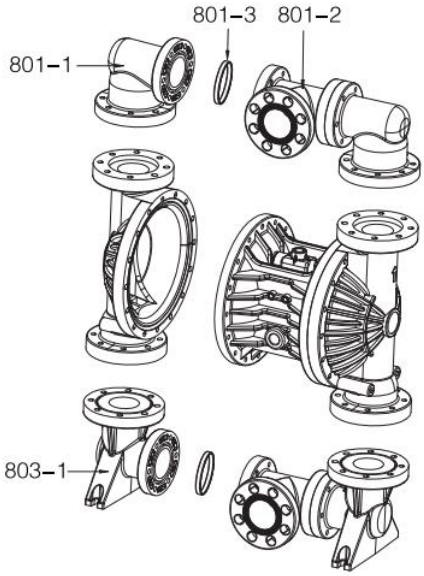

Aluminum pump center port
Stainless steel pump center port
Plastic pump center port

Part Numbers: Poly centre

Part code	Name
80MA1-KV	Air valve housing
80MA3-PM	Piston
80MA4-VT	Piston V-ring
80MA5-VT	Plug O-ring
80MA6-KV	Plug
80MA7-PM	Pilot valve
80MA8-SS	Valve plate
80MA9-ST	Air valve gasket
MA10-80-PP	Centre block

Part code	Name
MA11-PM	Reversing valve
MA12-VT	Shaft O-ring
80MA13-SS	Shaft
80MA14-PM	Locking plate
MA15-SS	Snap ring
80MA16-VT	Rod V-ring
80MA17-PP	Muffler plate
M80-AL	Muffler

Part code	Name
801-SS	Discharge Manifold
801-LL	
801-AL	
801-AC	
801-PP	
801-KV	
802-SS	Fluid chamber
802-LL	
802-AL	
802-AC	
802-PP	
802-KV	
803-SS	Suction Manifold
803-LL	
803-AL	
803-AC	
803-PP	
803-KV	
8001-TF	Valve ball
8001-ST	
8001-HY	
8001-BN	
8001-EP	
8001-SS	
8001-LL	
8002-PP	Valve seat
8002-AL	

Part code	Name
8002-TF	Valve seat
8002-ST	
8002-HY	
8002-BN	
8002-EP	
8002-VT	
8002-SS	
8002-LL	
8003-TF	Seat O-ring
8003-BN	
8003-EP	
8003-VT	
8004-KV	Plate
8004-PP	
8004-AL	
8004-SS	
8004-LL	
8005-TF	Teflon diaphragm
8006-ST	Rubber diaphragm
8006-HY	
8006-BN	
8006-EP	
8006-VT	
8007-AL	Inner plate
8008-SS	Bumper
8009-SS	Diaphragm Rod

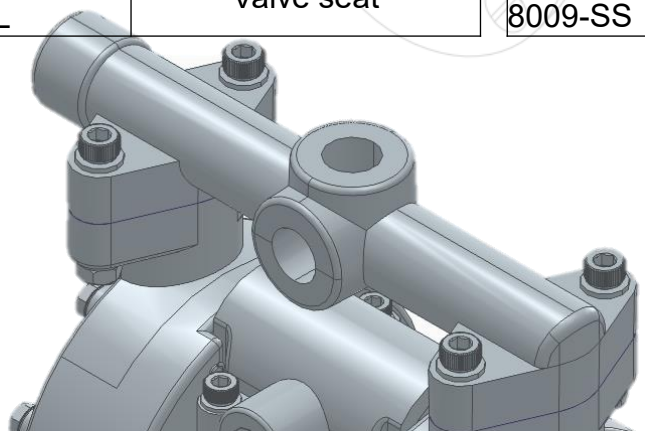

Part Numbers: Alumium centre

Part code	Name
80M01-AL	Air valve cap
80M02-BN	Air valve cap gasket
80M03-PM	Reversing switch
80M04-SS	Reversing pin
80M05-VT	Pin O-ring
80M06-PM	Piston
80M07-VT	Piston V-ring
80M10-PM	Pilot valve
80M11-SS	Valve plate

Part code	Name
80M12-ST	Valve plate gasket
80M13-ST	Air chamber gasket
80M14-PM	Pin bushing
80M15-PM	Piston bushing
80M16-PM	Rod bushing
80M17-VT	Rod V-ring
80M18-AL	Centre block
M80-AL	Muffler

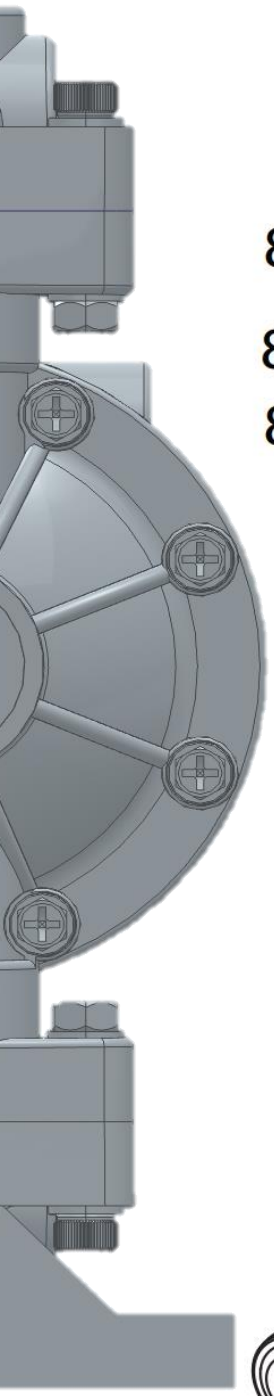

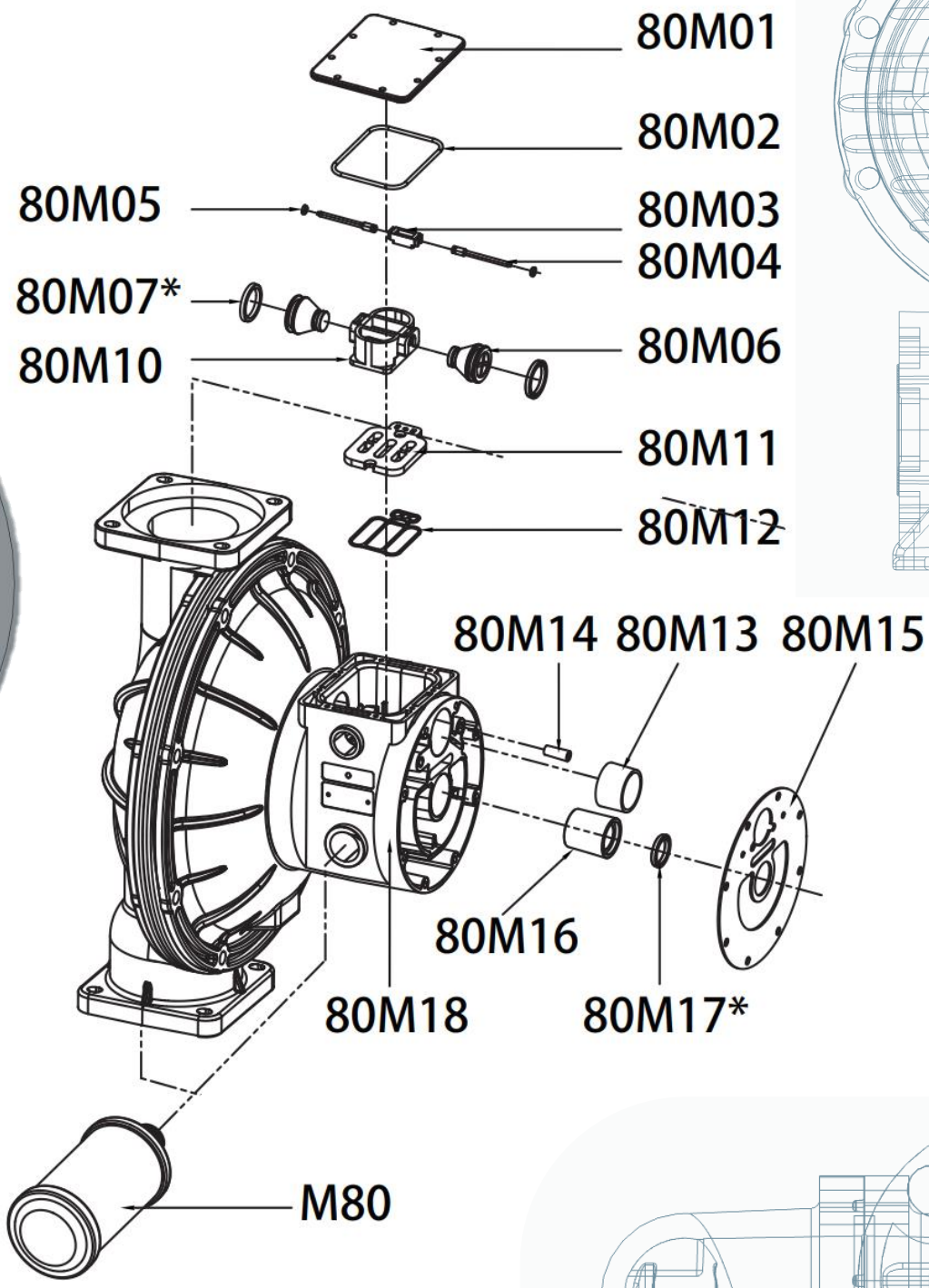

Part Numbers` : Aluminium centre

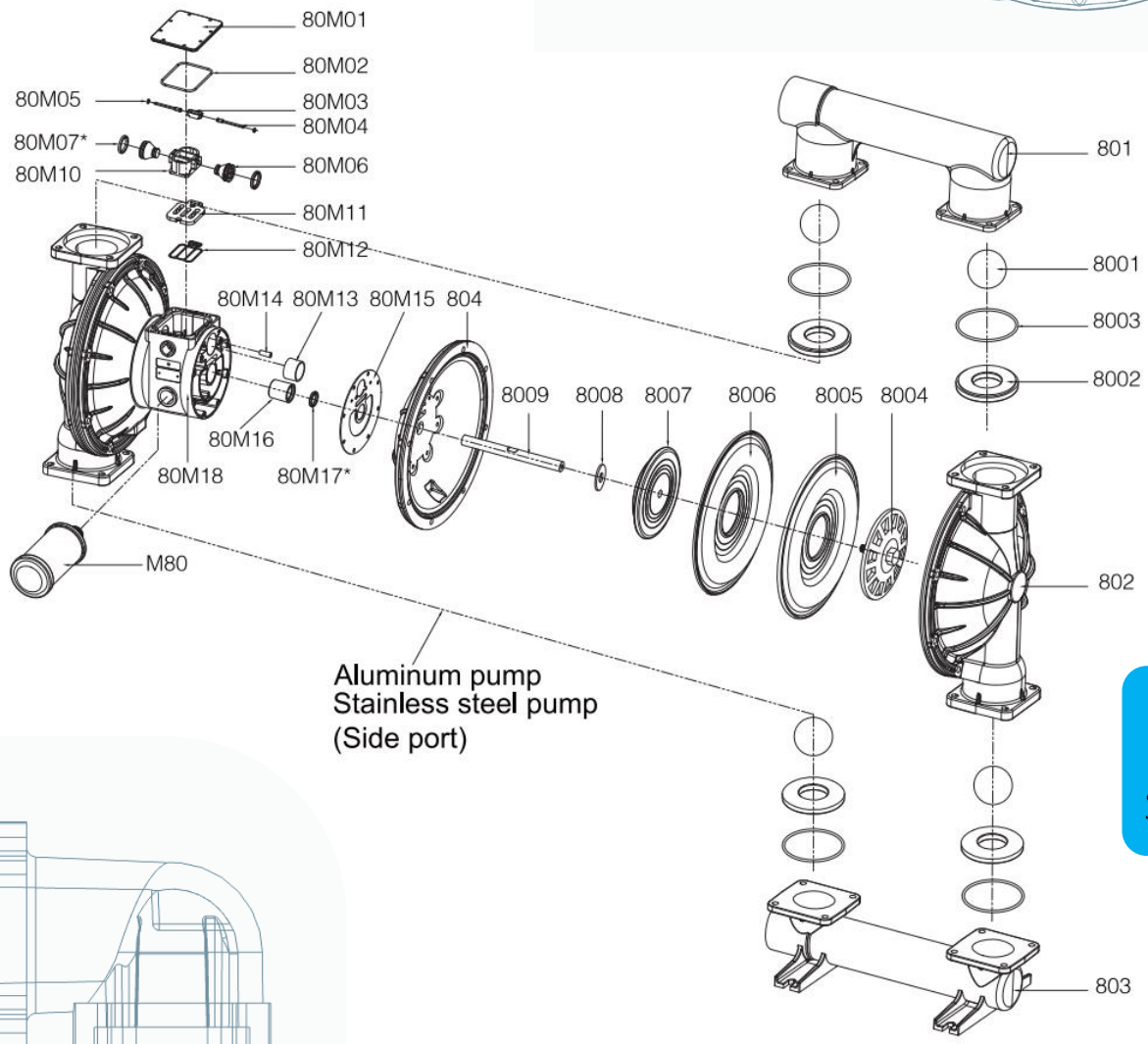

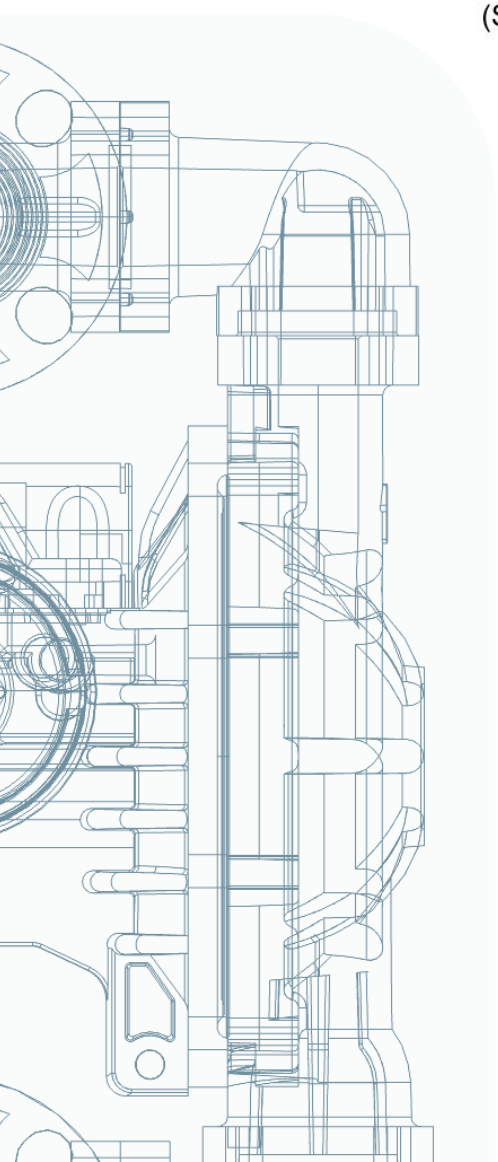

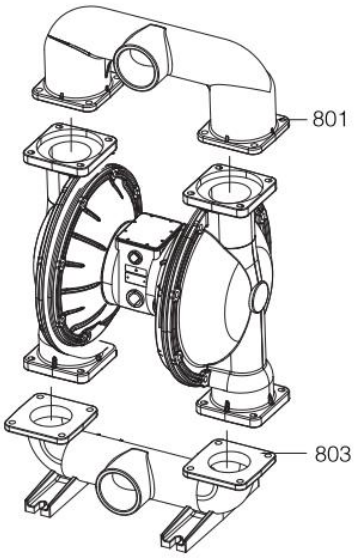

Cast iron pump

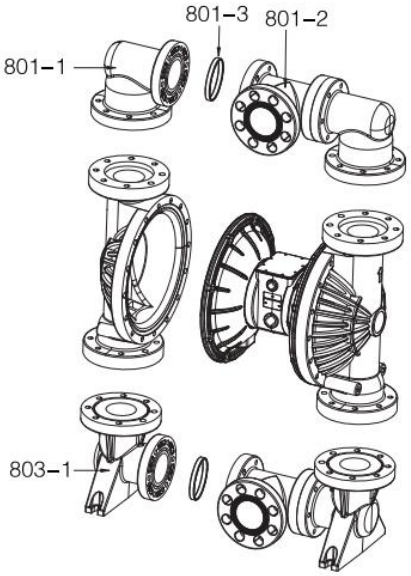

Aluminum pump center port
Stainless steel pump center port
Plastic pump center port

Part Numbers: Alumium centre

Part code	Name
80M01-AL	Air valve cap
80M02-BN	Air valve cap gasket
80M03-PM	Reversing switch
80M04-SS	Reversing pin
80M05-VT	Pin O-ring
80M06-PM	Piston
80M07-VT	Piston V-ring
80M10-PM	Pilot valve
80M11-SS	Valve plate

Part code	Name
80M12-ST	Valve plate gasket
80M13-ST	Air chamber gasket
80M14-PM	Pin bushing
80M15-PM	Piston bushing
80M16-PM	Rod bushing
80M17-VT	Rod V-ring
80M18-AL	Center block
M80-AL	Muffler

Part code	Name
801-SS	Discharge Manifold
801-LL	
801-AL	
801-AC	
801-PP	
801-KV	
802-SS	Fluid chamber
802-LL	
802-AL	
802-AC	
802-PP	
802-KV	
803-SS	Suction Manifold
803-LL	
803-AL	
803-AC	
803-PP	
803-KV	
804-AL	Air chamber
8001-TF	Valve ball
8001-ST	
8001-HY	
8001-BN	
8001-EP	
8001-SS	
8001-LL	
8002-PP	Valve seat
8002-AL	

Part code	Name
8002-TF	Valve seat
8002-ST	
8002-HY	
8002-BN	
8002-EP	
8002-VT	
8002-SS	
8002-LL	
8003-TF	Seat O-ring
8003-BN	
8003-EP	
8003-VT	
8004-KV	Plate
8004-PP	
8004-AL	
8004-SS	
8004-LL	
8005-TF	Teflon diaphragm
8006-ST	Rubber diaphragm
8006-HY	
8006-BN	
8006-EP	
8006-VT	
8007-AL	Inner plate
8008-SS	Bumper
8009-SS	Diaphragm Rod

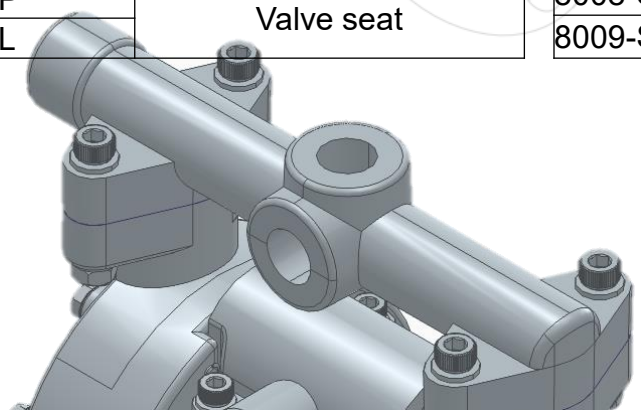

MODULUS

RANGE

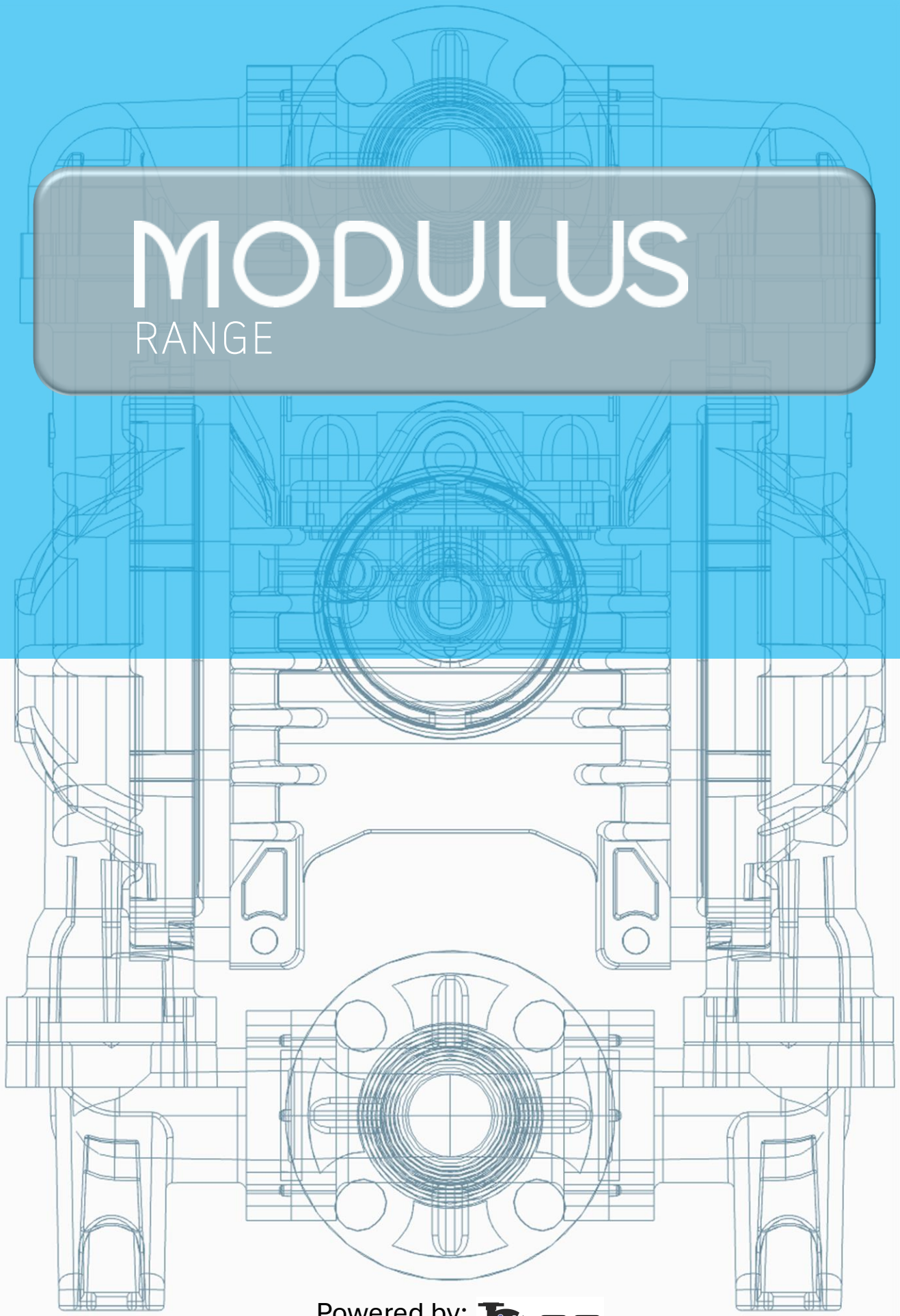

Powered by: AQS INDUSTRIES